LP3

Tunable White (CCT) LED Wall Plate

2.4 GHz RF | Battery powered | 1 zone | 4 scenes | Black



Product datasheet 14-09-2026

LP3 | Tunable White (CCT) LED Wall Plate



Product code: LP3

Key Features:

- **Colour Control Type:** CCT Tunable White
- **Control Distance:** 30m
- **Body Colour:** Black
- **Dimensions (W x H x L):** 86 x 10 x 86mm

Mechanical Data

Body Colour:	Black	**Product Weight:**	133g
Dimensions (LxWxH):	86 x 86 x 10mm		

Input Data

Input Current:	0.08A	**Input Current Type:**	DC
Input Voltage:	3V		

Control Data

Battery Type:	CR2032	**Colour Control Type:**	CCT Tunable White
Control Distance (barrier-free):	30m	**No. of Zones:**	1

Environmental Data

Body Material:	PC	**Case Temperature Max. (tc):**	65°C

Environmental Data

Ingress Protection (IP):	IP20	**Mounting Type:**	Surface Mounted
Operating Temperature:	30°C - 55°C		

Dimension Drawing

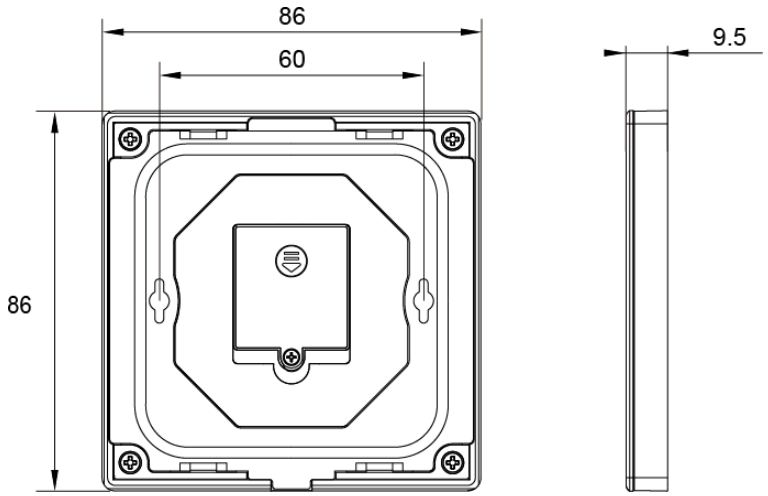

Packaging Data

Fixings Included:	Yes	**Packaging Height:**	6.5mm
Packaging Length:	100mm	**Packaging Width:**	92mm
Packaging Weight:	145g		