Wireless touch panels

LP1 / LP2 / LP4 / LP5 | Single-zone RF control | Installation and user guide



Model	Compatible lighting
LP1	Single-colour dimming
LP2	Tunable white (CCT)
LP4	RGB or RGBW
LP5	RGB+CCT

Battery-powered touch panels with a glass face, a central touch wheel and illuminated keys. Each panel can control multiple compatible 2.4GHz RF LED controllers in a single zone. Available in black or white. No control wiring is required, and the panel can be removed from its base.

Technical specifications

RF signal / range	2.4GHz; up to 30m in an open, unobstructed area
Battery / working voltage	CR2032; 3V DC
Current	Working: less than 8mA; standby: less than 16µA
Standby time	1 year
Operating temperature	-30°C to +55°C
Maximum case temperature	+65°C
IP rating	IP20
Panel dimensions	86 x 86 x 9.5mm; fixing-hole spacing: 60mm
Packaging / gross weight	100 x 92 x 16.5mm / 0.137kg
Warranty	5 years
EMC standards	ETSI EN 301 489-1 V2.2.3; ETSI EN 301 489-17 V3.2.4
Safety / radio standards	EN 62368-1:2020+A11:2020; ETSI EN 300 328 V2.2.2
Certification	CE, EMC, LVD, RED

Installation & pairing

Use indoors in dry locations only. Pair with a compatible 2.4GHz RF LED controller.

Mount the panel

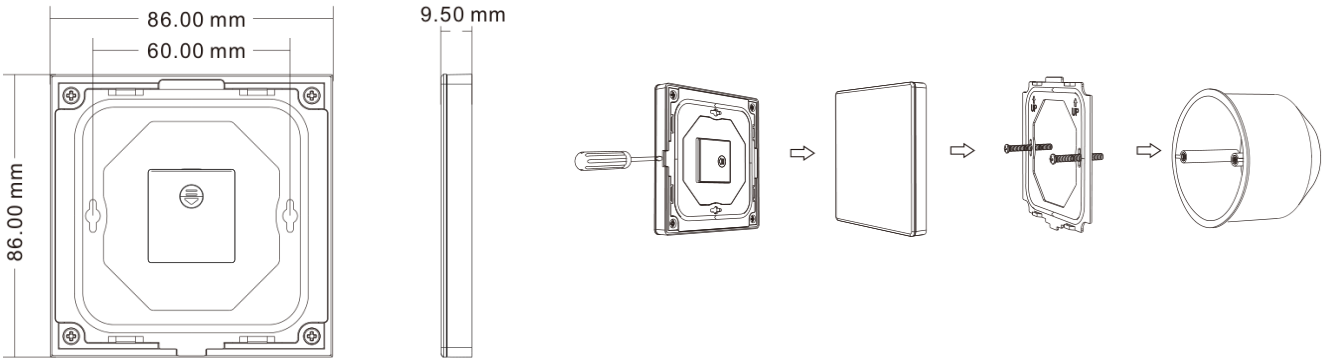

Secure the base to the wall with two screws or an adhesive pad, or attach the panel directly to a suitable metal surface using its magnetic mounting. The diagram shows the panel, baseplate and base separated for installation.

Pair using the controller's Match button

Pair: briefly press the Match button on the LED controller, then immediately press the panel's on/off button. The controller indicator flashes several times to confirm pairing.
Clear all pairings: hold the controller's Match button for **5 seconds**. The indicator flashes several times to confirm that all paired remotes have been removed.

Pair by restarting the controller power

Pair: switch the LED controller off and on, then repeat this off/on sequence once more. Immediately press the panel's on/off button **3 times**. The lights flash **3 times** to confirm pairing.
Clear all pairings: repeat the same two off/on power cycles, then immediately press the panel's on/off button **5 times**. The lights flash **5 times** to confirm that all paired remotes have been removed.

Battery care & troubleshooting

Fit the CR2032 battery with the correct polarity. If the indicator does not light when a key is pressed, check the battery and its contacts. Replace a flat battery. If repeated battery removal has flattened the spring contact, gently lift it with a screwdriver to restore contact.

Replace the battery if the operating range decreases or the controls respond poorly. Remove the battery if the panel will not be used for a long time. If the receiver does not respond, pair the panel again. Handle the panel carefully and avoid dropping it.

LP1 & LP2 controls

LP1: single-colour dimming | LP2: tunable-white (CCT) lighting

LP1 - single-colour dimming



On/off: switch the lights on or off.

Brightness + / -: increase or decrease brightness in 10 steps.

Touch wheel: slide your finger around the wheel to adjust brightness.

Scenes 1-4: tap a scene key to recall it. Hold a scene key for **5 seconds** to save the current settings to that scene.

LP2 - tunable white (CCT)



On/off: switch the lights on or off.

Brightness + / -: increase or decrease brightness in 10 steps.

White-tone key: cycle through warm white, neutral white and cool white.

Touch wheel: adjust the colour temperature.

Scenes 1-4: tap to recall a scene. Hold for **5 seconds** to save the current settings.

Lock or unlock the scene keys - all models

Scene keys are unlocked by default. Locking them prevents a long press from overwriting saved scenes; you can still tap a key to recall a scene.

Lock all scene keys:
1. Use the panel's on/off key to turn the lights on, then off.
2. Immediately hold the on/off key for **5 seconds**.
3. Immediately hold any scene key for **5 seconds**.

Unlock all scene keys: repeat steps 1 and 2, then immediately hold any scene key for **10 seconds**.

LP4 & LP5 controls

LP4: RGB / RGBW lighting | LP5: RGB+CCT lighting

LP4 - RGB / RGBW



On/off: switch the lights on or off.

White key: for RGB, tap to select RGB-mixed white; hold for **1-6 seconds** to adjust colour saturation. For RGBW, tap to select the dedicated white channel; hold for **1-6 seconds** to adjust its brightness.

Brightness / speed key: in static-colour mode, tap to adjust brightness in 10 steps, or hold for **1-6 seconds** for continuous adjustment. In dynamic mode, tap to adjust speed in 10 steps, or hold for **2 seconds** to restore the default speed.

Mode key: tap for the next dynamic effect; hold for **2 seconds** to cycle through the modes.

Touch wheel: select a static RGB colour.

Scenes 1-4: tap to recall; hold for **5 seconds** to save the current settings.

LP5 - RGB+CCT



On/off: switch the lights on or off.

Brightness key: adjust brightness in 10 steps.

Warm / cool keys: decrease or increase colour temperature in 11 steps.

Touch wheel: select a static RGB colour.

Mode key: tap for the next dynamic effect; hold for **2 seconds** to cycle through the modes.

Speed / saturation key: in dynamic mode, tap to adjust speed in 10 steps, or hold for **2 seconds** to restore the default speed. In static-colour mode, tap to adjust saturation in 11 steps, or hold for **1-6 seconds** for continuous adjustment.

Scenes 1-2: tap to recall; hold for **5 seconds** to save the current settings.